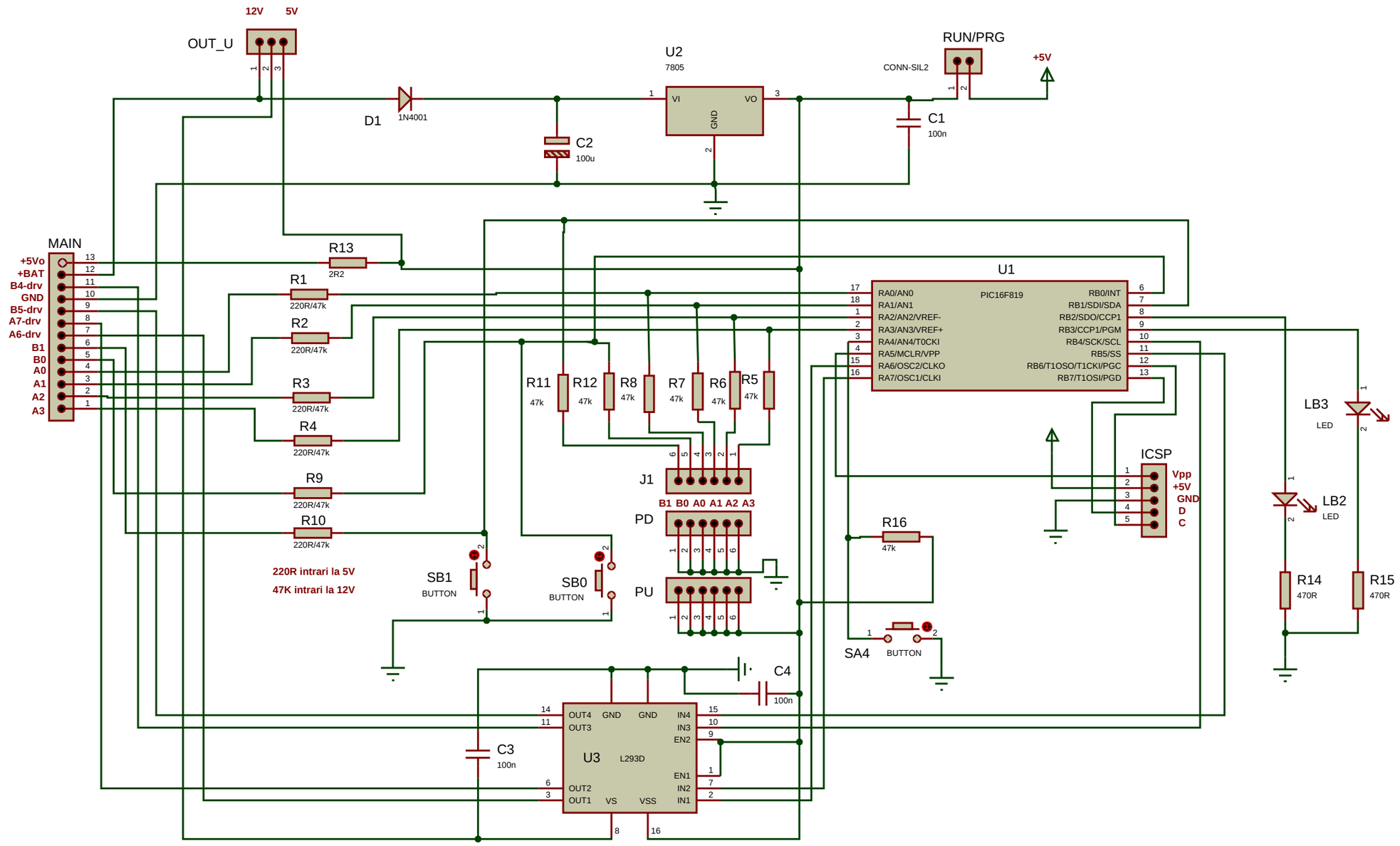
12V
5V
OUT_U
D1
1N4001
U2
7805
VI
VO
GND
C2
100u
RUN/PRG
CONN-SIL2
+5V
C1
100n
MAIN
+5Vo
+BAT
B4-drv
GND
B5-drv
A7-drv
A6-drv
B1
B0
A0
A1
A2
A3
R13
2R2
R1
220R/47k
R2
220R/47k
R3
220R/47k
R4
220R/47k
R9
220R/47k
R10
220R/47k
220R intrari la 5V
47K intrari la 12V
U1
PIC16F819
RA0/AN0
RA1/AN1
RA2/AN2/VREF-
RA3/AN3/VREF+
RA4/AN4/T0CKI
RA5/MCLR/VPP
RA6/OSC2/CLKO
RA7/OSC1/CLKI
RB0/INT
RB1/SDI/SDA
RB2/SDO/CCP1
RB3/CCP1/PGM
RB4/SCK/SCL
RB5/SS
RB6/T1OSO/T1CKI/PGC
RB7/T1OSI/PGD
R11
47k
R12
47k
R8
47k
R7
47k
R6
47k
R5
47k
J1
B1 B0 A0 A1 A2 A3
PD
PU
SB1
BUTTON
SB0
BUTTON
R16
47k
SA4
BUTTON
ICSP
Vpp
+5V
GND
D
C
LB3
LED
LB2
LED
R14
470R
R15
470R
C4
100n
C3
100n
U3
L293D
OUT4
OUT3
OUT2
OUT1
GND
GND
VS
VSS
IN4
IN3
EN2
EN1
IN2
IN1